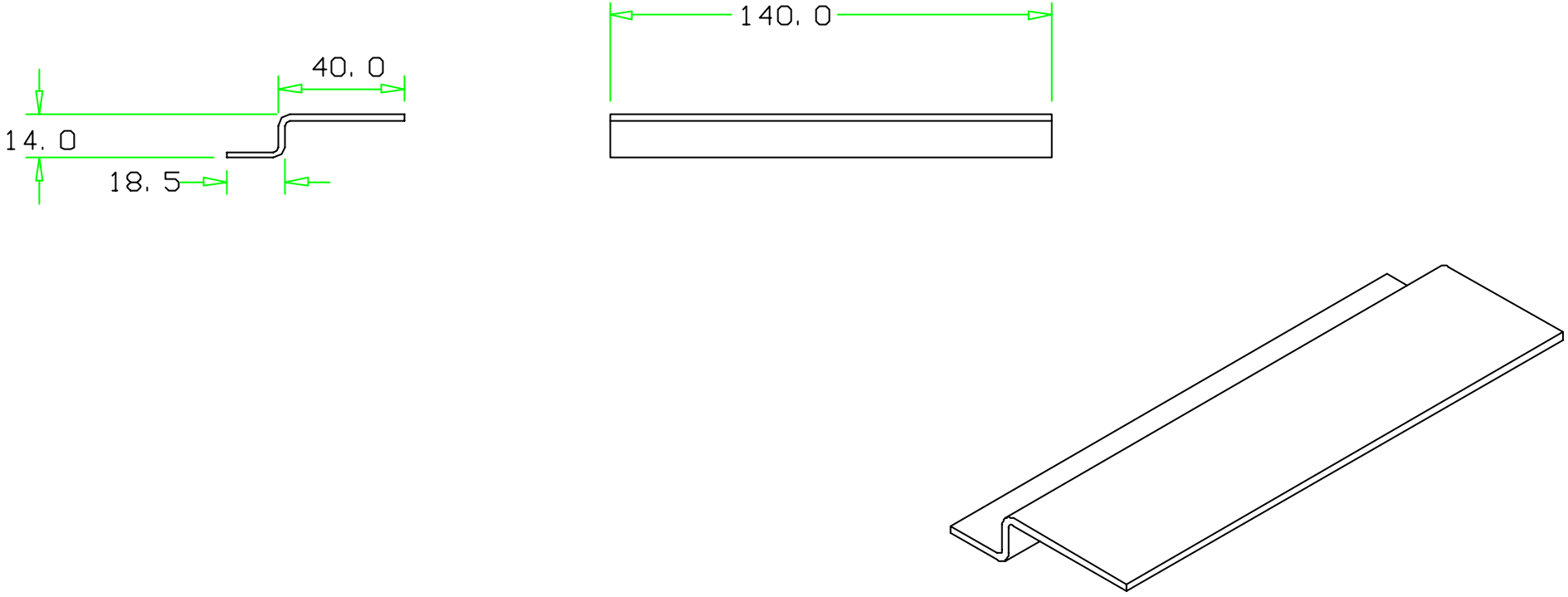

Issued	Quantity	Title/Name Designation, material, dimension etc	Art/Pn No./Reference
Designed by B.E.	Checked by	Approved by - date	Filename -
Date 21-11-nd	Scale NTS		

METALMAN ENGINEERING LTD.

Pan Bracket Typ A,B,C&D

Mat'l- 2mm C.R. M/S

Edition 0

Sheet 1/1